STEP 9
Fit the 2nd Metal Plate onto the opposite side of the Curved Beams at the centre.

STEP 10
Thread one of the Ropes (**5**) through the Posts and Curved Beams. The two ends should be brought together in one of the holes and retained by screws. Evenly space the Rope between the Posts.

STEP 11
Fit the 2nd Rope in the same manner through the Curved Beam holes.

STEP 12
Ensure the structure is vertical and the Posts are all at the same height. Fill the holes with the chosen method.

STEP 13
Lay the Fan Deck Tiles (**3**) and centre Round Tile (**4**).

OPTION:
If your Pergola has a Golden Globe (**6**) to fit on the top, this may now be fitted.

AFTERCARE
To ensure longevity of your structure it is recommended that it is treated with a wood preservative on a yearly basis.

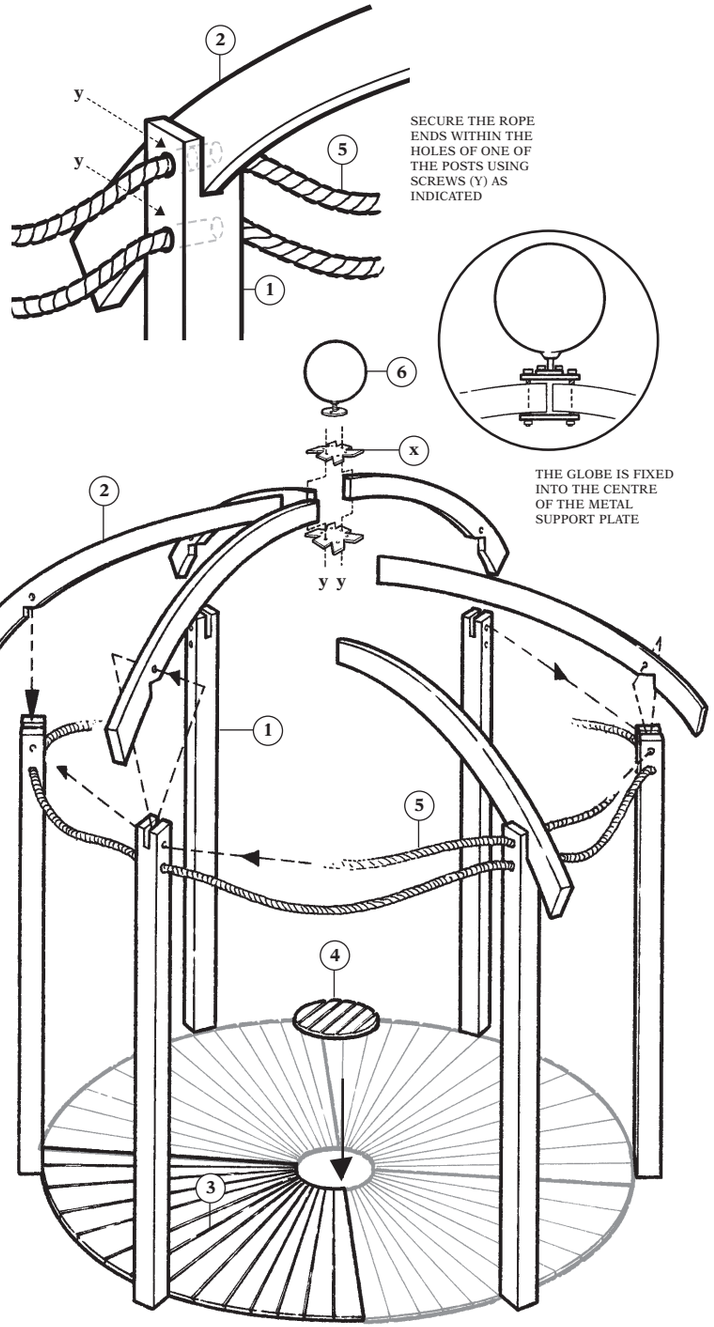

DOMED PERGOLA

ASSEMBLY INSTRUCTIONS

PLAN

ALL PRODUCTS ARE MEASURED TO THE HIGHEST AND WIDEST POINT AND ALL SIZES ARE APPROXIMATE

TOP ELEVATION

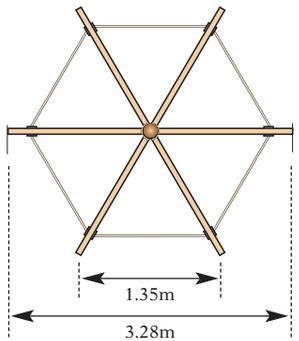

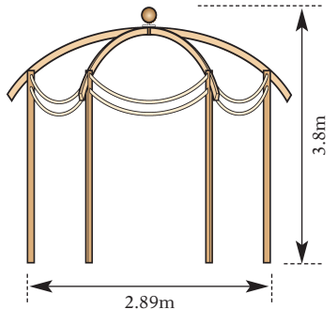

SIDE ELEVATION

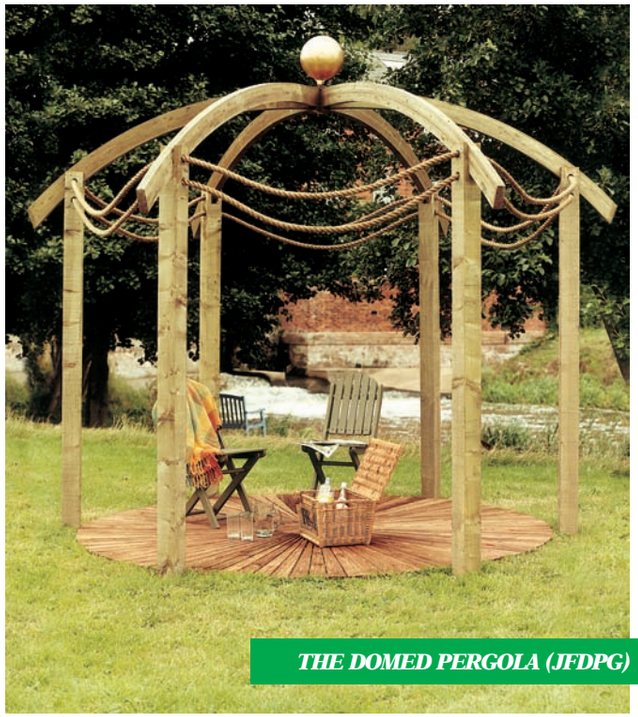

THE DOMED PERGOLA (JFDPG)

5 019063 600619 >

Grange Code: JFDPG

FSC www.fsc.org MIX Wood from responsible sources FSC® C018354

GRANGE FENCING LIMITED
Halesfield 21, Telford TF7 4PA
Tel: 01952 588088 **Fax:** 01952 581522
Email: sales@grangefen.co.uk **Web**: www.grangefen.co.uk
OUT OF HOURS MESSAGE SERVICE: **01952 588088**

JULY 2011 - ISSUE 2

Thank you for choosing this garden structure from Grange Fencing Ltd. In order to gain the most benefit from it please read the following instructions carefully.

TOOLS REQUIRED *(Not Supplied)*

POWER DRILL (+ crosshead screwdriver bit)
SPIRIT LEVEL
TAPE MEASURE
STEPLADDER

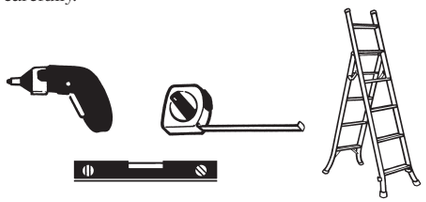

PARTS LIST

1	TIMBER POSTS	6
2	CURVED BEAMS	6
3	ELITE FAN DECKING TILE	4
4	ELITE ROUND DECK TILE	1
5	SISAL ROPES	2
6	GOLD GLOBE	1

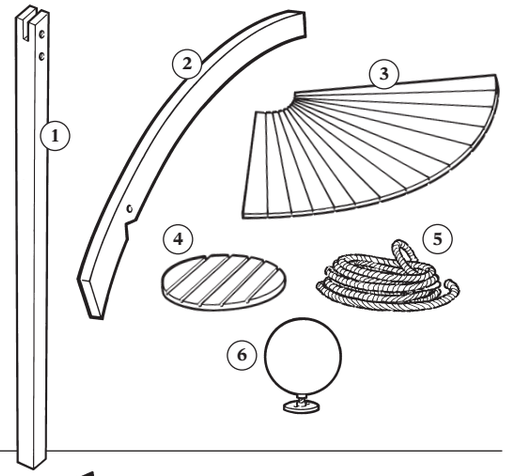

HARDWARE PACK

x	METAL SUPPORT PLATES	2
y	SCREWS (No.8 x 50)	28

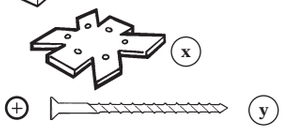

BEFORE YOU START

- Please ensure that you check all the component parts for quantity and quality before you commence building the product. Report any missing parts immediately. The manufacturer will not accept any responsibility for damaged items once any part of the product has been fitted or altered in any way.
- Timber is a natural material and will react to varying levels of moisture content - ie. will swell or shrink. All of the Timber components are pressure treated green. However, should extra protection be required, they should be treated using a wood preservative treatment, following the manufacturers instructions.

HEALTH AND SAFETY

Do not lean or stand on the roof assembly at any time - the structure is not of a load bearing design.
Do not overstretch when working from the step ladder.
In order to reduce the risk of suffocation please keep all plastic bags and small parts away from children.

- When you are ready to start, make sure you have the right tools to hand, plenty of space and a clean, dry area for assembly. It is advisable for two people to carry out the work.

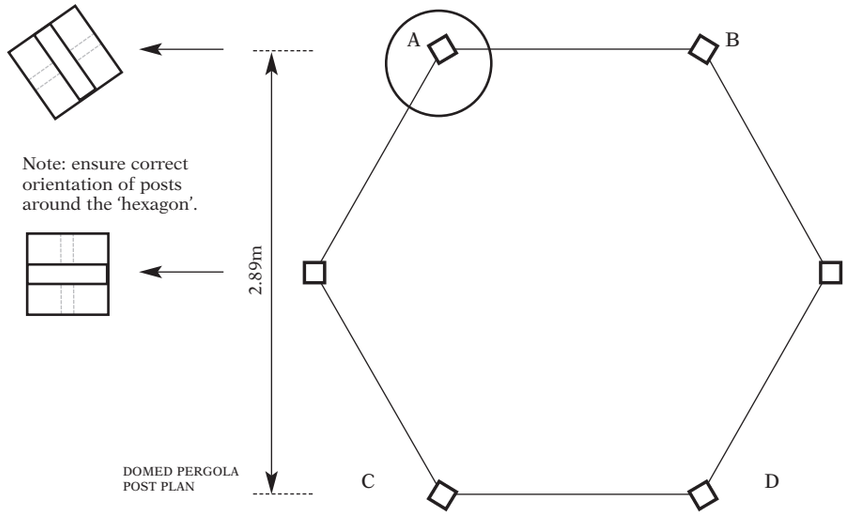

ASSEMBLY INSTRUCTIONS

STEP 1
Using the layout shown (above) mark out the area where the structure is to be sited. The ground should be flat and level for the Fan Tiles.

STEP 2
Prepare the holes for the Posts (**1**). Each hole should be 300mm deep. Make sure the depths are the same to ensure the pergola is level when all the posts are sited. Allow adequate room for the preferred method of fixing (ie. MetCrete).

We would recommend that you use **MetCrete**, fast set post fixing concrete to fix your posts. Easy to use, it sets in just 10 minutes.

STEP 3
Take one of the Metal Plates (**x**) for the centre of the roof. Fasten one of the Curved Beams (**2**) to it using screws (**y**).

STEP 4
Fasten two of the other Curved Beams to the Metal Plate missing one spur out each time.

STEP 5
Place three Posts in the holes corresponding with the Curved Beam assembly.

STEP 6
Raise the Curved Beam assembly and locate into the top of the Posts.

STEP 7
Fix another Curved Beam to the Metal Centre Plate. Site another Post in the corresponding hole and locate the Curved Beam in the slot.

STEP 8
Repeat step 7 for the remaining two Curved Beams and Posts.
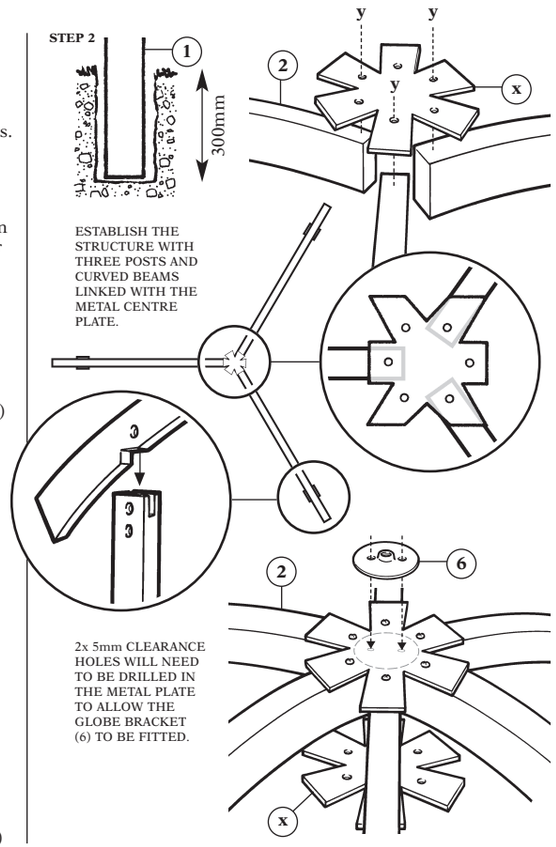
(continued overleaf)